VRB

Reach-In Merchandiser
2, 3, 4, & 5 Door / 4', 6', 8', & 12' (Beverage / Dairy / Deli / Meat / Produce)

GENERAL NOTES

- 4-foot case Bi-Swing consist of 2 (24") doors.
- 6-foot case Bi-Swing consist of 3 (24") doors.
- 8-foot cases single swing consist of 3 (32") doors.
- 8-foot case Bi-swing consist of 4 (24") doors.
- 12-foot cases single swing consist of 4 (36") doors.
- 12-foot cases Bi-swing consist of 6 (24") doors.
- Door frames are heated. Doors are not heated.
- Lighting controls - occupancy sensors are required.
  Option 1: OEM Provided: Lighting controls (on/off) are standard unless otherwise specified.
  Option 2: End User Provided: Lighting controls should be based on occupancy sensors. Store level A/S control should be set to 20% minimum off time at 75°F/55%RH.

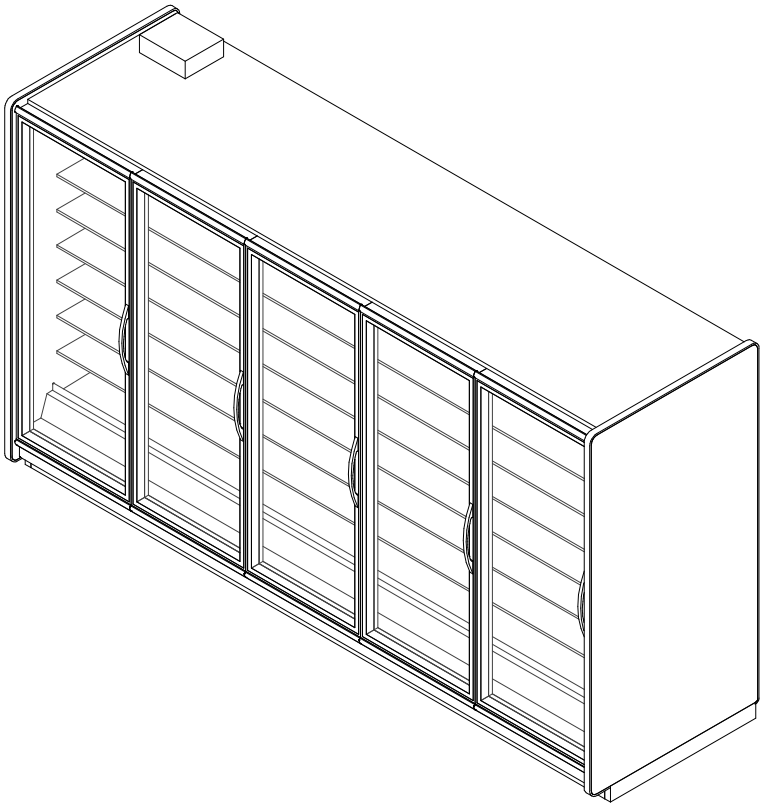

SHIPPING WEIGHT	
Case	Weight
VRB	---

2017 DOE COMPLIANT COMPONENT

ALL MEASUREMENTS ARE TAKEN PER ASHRAE-72-2005 SPECIFICATIONS. HILLPHOENIX REFRIGERATED DISPLAY CASES FOR SALE IN THE UNITED STATES MEET OR EXCEED DEPARTMENT OF ENERGY 2017 REQUIREMENTS.

VRB

Rev. Date	Rev. #	Rev. Title
9-26-19	6	DATA UPDATE
9-26-19	5	ENDVIEW UPDATE

Hillphoenix
A DOVER COMPANY

VRB

Reach-In Merchandiser
2, 3, 4, & 5 Door / 4', 6', 8', & 12' (Beverage / Dairy / Deli / Meat / Produce)

ELECTRICAL DATA			
Case Length	Fans Per Case	High Efficiency Fans 120 Volt	
		Amps	Watts
2 Door	1	0.22	26
3 Door	2	0.43	52
4 Door	2	0.43	52
5 Door	3	0.65	78
4'	1	0.22	26
6'	2	0.43	52
8'	2	0.43	52
12'	3	0.65	78

LIGHTING DATA					
Case Length	Door Size	OP45 120 Volts		OP55 (French Swing Only) 120 Volts	
		Amps	Watts	Amps	Watts
2 Door	30"	0.36	43.1	---	---
3 Door	30"	0.54	65.2	---	---
4 Door	30"	0.73	87.3	---	---
5 Door	30"	0.91	109.4	---	---
4'	24"	---	---	0.26	31.0
6'	24"	---	---	0.52	61.9
8'	24"	---	---	0.52	61.9
8'	32"	0.54	65.2	---	---
12'	24"	---	---	0.77	92.8
12'	36"	0.73	87.3	---	---

ANTI CONDENSATE DATA					
		101 Frames Un Heated Doors ELMD, ELMH, I90 120 Volts		Vista Frames Un Heated Doors Vista C, I60 120 Volts	
Case Length	Door Size	Amps	Watts	Amps	Watts
2 Door	30"	0.22	43	0.36	43
3 Door	30"	0.43	68	0.57	68
4 Door	30"	0.43	95	0.79	95
5 Door	30"	0.65	118	0.98	118
4'	24"	0.19	23	0.19	23
6'	24"	0.40	48	0.40	48
8'	24"	0.44	53	0.44	53
8'	32"	0.58	70	0.58	70
12'	24"	0.70	84	0.70	84
12'	36"	0.84	101	0.84	101

2017 DOE COMPLIANT NSF c UL us COMPONENT

ALL MEASUREMENTS ARE TAKEN PER ASHRAE-72-2005 SPECIFICATIONS. HILLPHOENIX REFRIGERATED DISPLAY CASES FOR SALE IN THE UNITED STATES MEET OR EXCEED DEPARTMENT OF ENERGY 2017 REQUIREMENTS.

VRB

Rev. Date	Rev. #	Rev. Title
9-26-19	6	DATA UPDATE
9-26-19	5	ENDVIEW UPDATE

Hillphoenix A DOVER COMPANY

VRB

Reach-In Merchandiser
2, 3, 4, & 5 Door / 4', 6', 8', & 12' (Beverage / Dairy / Deli / Meat / Produce)

GUIDELINES AND CONTROL SETTINGS

Application	Case Length	Door Size	BTUH/Door		Superheat Set Point @ Bulb (°F)	Evaporator (°F)	Discharge Air (°F)	Discharge Air Velocity (FPM)
			Conventional	Parallel				
Beverage/Produce	2 - 5 Door	30"	555	550	6 - 8	34	39	235
Beverage/Produce	4'	24"	445	440	6 - 8	34	39	235
Beverage/Produce	6'	24"	445	440	6 - 8	34	39	235
Beverage/Produce	8'	24"	445	440	6 - 8	34	39	235
Beverage/Produce	8'	32"	595	585	6 - 8	34	39	235
Beverage/Produce	12'	24"	445	440	6 - 8	34	39	235
Beverage/Produce	12'	36"	665	660	6 - 8	34	39	235
Deli/Dairy/Cut Produce	2 - 5 Door	30"	605	580	6 - 8	31	35	235
Deli/Dairy/Cut Produce	4'	24"	485	465	6 - 8	31	39	235
Deli/Dairy/Cut Produce	6'	24"	485	465	6 - 8	31	35	235
Deli/Dairy/Cut Produce	8'	24"	485	465	6 - 8	31	35	235
Deli/Dairy/Cut Produce	8'	32"	645	620	6 - 8	31	35	235
Deli/Dairy/Cut Produce	12'	24"	485	465	6 - 8	31	35	235
Deli/Dairy/Cut Produce	12'	36"	725	695	6 - 8	31	35	235
Meat	2 - 5 Door	30"	665	640	6 - 8	28	33	235
Meat	4'	24"	530	510	6 - 8	28	33	235
Meat	6'	24"	530	510	6 - 8	28	33	235
Meat	8'	24"	530	510	6 - 8	28	33	235
Meat	8'	32"	710	680	6 - 8	28	33	235
Meat	12'	24"	530	510	6 - 8	28	33	235
Meat	12'	36"	795	765	6 - 8	28	33	235

DEFROST CONTROLS

Defrosts Per Day	Timed-Off Defrost	
	Fail-Safe (Min)	Termination Temp (F)
2	30	38

NOTES

- "---" indicates that this feature is not an option on this case model.
- Listed discharge air velocity represents the average velocity at the peak of defrost.
- Temperature and defrost settings listed above are recommended start-up settings. Final operational settings may need to be adjusted for the store conditions in which the case operates.
- The recommended evaporator temperatures may need to be adjusted based on system setup, store conditions, etc. The minimum recommended evaporator temperature is 4°F below the listed evaporator temperature.
- Light wattages above reflect 100% run time. To determine actual daily energy usage at 75ºF/55%RH conditions, reduce the light wattages above by 42%.

2017 DOE COMPLIANT NSF c UL us COMPONENT

ALL MEASUREMENTS ARE TAKEN PER ASHRAE-72-2005 SPECIFICATIONS. HILLPHOENIX REFRIGERATED DISPLAY CASES FOR SALE IN THE UNITED STATES MEET OR EXCEED DEPARTMENT OF ENERGY 2017 REQUIREMENTS.

VRB

Rev. Date	Rev. #	Rev. Title
9-26-19	6	DATA UPDATE
9-26-19	5	ENDVIEW UPDATE

Hillphoenix A DOVER COMPANY

VRB

Reach-In Merchandiser
2, 3, 4, & 5 Door / 4', 6', 8', & 12' (Beverage / Dairy / Deli / Meat / Produce)

SECOND NATURE DATA

Case Model	No. of Coils	Application	Front Sill height	BTUH/Door		GPM/ft (DR)	Supply Fluid Temp (°F)	Discharge Air Temp (°F)
				Conventional	Parallel			
VRB (30" Door)	1	Beverage	Std. Reach In	640	666	0.07	20	34
VRB (30" Door)	1	Deli	Std. Reach In	710	697	0.10	20	31
VRB (30" Door)	1	Meat	Std. Reach In	810	777	0.15	20	28
VRB (30" Door)	1	Beverage	Std. Reach In	640	666	0.10	25	34
VRB (30" Door)	1	Deli	Std. Reach In	710	697	0.16	25	31
VRB (30" Door)	1	Meat	Std. Reach In	810	777	0.21	25	28
VRB (Per Foot)	1	Beverage	Std. Reach In	268	266	0.03	20	34
VRB (Per Foot)	1	Deli	Std. Reach In	284	139	0.04	20	31
VRB (Per Foot)	1	Meat	Std. Reach In	324	311	0.06	20	28
VRB (Per Foot)	1	Beverage	Std. Reach In	268	266	0.04	25	34
VRB (Per Foot)	1	Deli	Std. Reach In	284	139	0.06	25	31
VRB (Per Foot)	1	Meat	Std. Reach In	324	311	0.08	25	28

SECOND NATURE DATA

Case Model	No. of Coils	Application	Front Sill height	Supply Fluid Temp (°F)	No. of Defrost	Timed-Off Defrost		Warm Fluid Defrost	
						Fail-Safe (Min)	Termination Temp (°F)	Fail-Safe (Min)	Termination Temp (°F)
VRB (30" Door)	1	Beverage	Std. Reach In	20	2	60	47	26	49
VRB (30" Door)	1	Deli	Std. Reach In	20	2	60	47	26	49
VRB (30" Door)	1	Meat	Std. Reach In	20	2	60	47	26	49
VRB (30" Door)	1	Beverage	Std. Reach In	25	2	60	42	26	49
VRB (30" Door)	1	Deli	Std. Reach In	25	2	60	42	26	49
VRB (30" Door)	1	Meat	Std. Reach In	25	2	60	42	26	49
VRB (Per Foot)	1	Beverage	Std. Reach In	20	2	60	47	26	49
VRB (Per Foot)	1	Deli	Std. Reach In	20	2	60	47	26	49
VRB (Per Foot)	1	Meat	Std. Reach In	20	2	60	47	26	49
VRB (Per Foot)	1	Beverage	Std. Reach In	25	2	45	42	26	49
VRB (Per Foot)	1	Deli	Std. Reach In	25	2	45	42	26	49
VRB (Per Foot)	1	Meat	Std. Reach In	25	2	45	42	26	49

NOTES

- All medium temperature data listed is for 35% by wt. PROPYLENE GLYCOL.
- Inhibited Propylene Glycol solution with water, such as Dowfrost or equivalent. (Dowfrost is a trademark of the Dow Chemical Company).
- Flowrates are determined by ASHRAE test conditions and may need to be adjusted based on store conditions.
- ** Flowrates are per case

2017 DOE COMPLIANT NSF c UL us COMPONENT

ALL MEASUREMENTS ARE TAKEN PER ASHRAE-72-2005 SPECIFICATIONS. HILLPHOENIX REFRIGERATED DISPLAY CASES FOR SALE IN THE UNITED STATES MEET OR EXCEED DEPARTMENT OF ENERGY 2017 REQUIREMENTS.

VRB

Rev. Date	Rev. #	Rev. Title
9-26-19	6	DATA UPDATE
9-26-19	5	ENDVIEW UPDATE

Hillphoenix A DOVER COMPANY

VRB

Reach-In Merchandiser
2, 3, 4, & 5 Door / 4', 6', 8', & 12' (Beverage / Dairy / Deli / Meat / Produce)

DOOR OPTIONS	FRONT OPTIONS
STANDARD SWING DOOR 2, 3, 4 & 5 - DOOR CASES 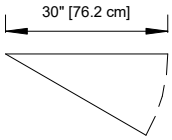 	**FLAT FRONT (V SERIES)** 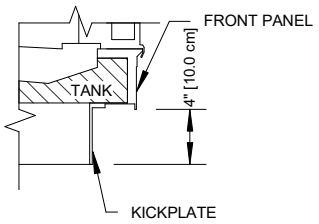
STANDARD SWING DOOR 8' CASE 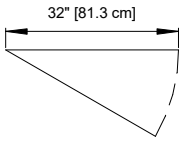 	
STANDARD SWING DOOR 12' CASE 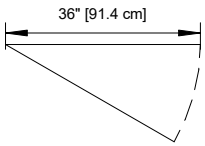 	
BI- SWING DOOR 4', 6', 8' & 12' CASES 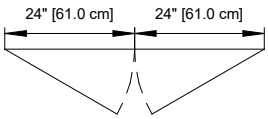 	

2017 DOE COMPLIANT NSF c UL us COMPONENT

ALL MEASUREMENTS ARE TAKEN PER ASHRAE-72-2005 SPECIFICATIONS. HILLPHOENIX REFRIGERATED DISPLAY CASES FOR SALE IN THE UNITED STATES MEET OR EXCEED DEPARTMENT OF ENERGY 2017 REQUIREMENTS.

VRB

Rev. Date	Rev. #	Rev. Title
9-26-19	6	DATA UPDATE
9-26-19	5	ENDVIEW UPDATE

Hillphoenix A DOVER COMPANY

VRB

Reach-In Merchandiser
2, 3, 4, & 5 Door / 4', 6', 8', & 12' (Beverage / Dairy / Deli / Meat / Produce)

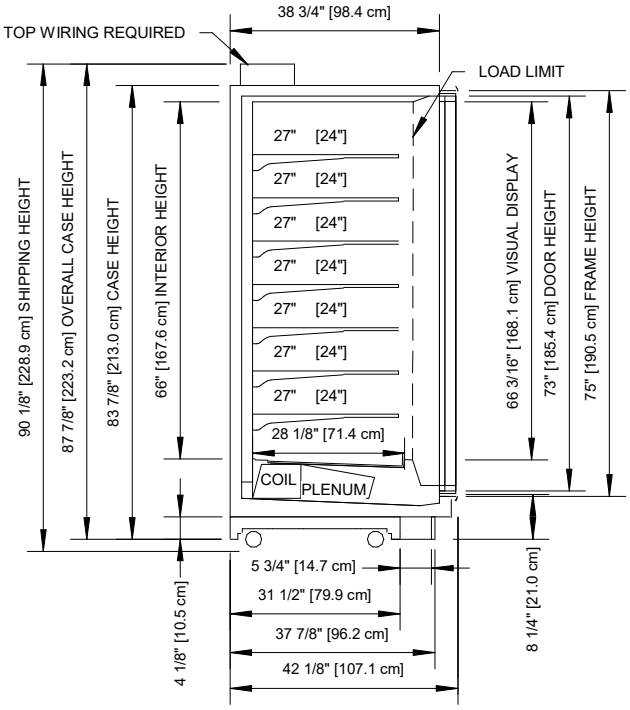

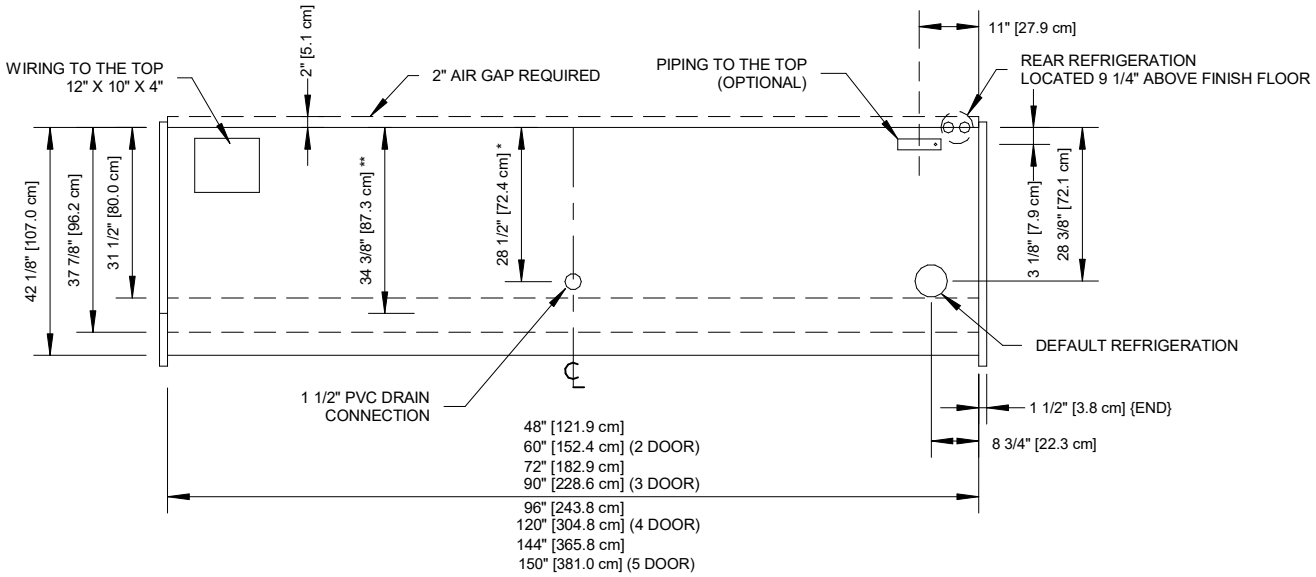

NOTES

* : STUB-UP AREA

** : RECOMMENDED STUB-UP CENTERLINE FOR ELECTRICAL AND HUB DRAINS

- Ends add approximately 1" to case height, 1/2" to the back & 1" to the front

2017 DOE COMPLIANT COMPONENT

ALL MEASUREMENTS ARE TAKEN PER ASHRAE-72-2005 SPECIFICATIONS. HILLPHOENIX REFRIGERATED DISPLAY CASES FOR SALE IN THE UNITED STATES MEET OR EXCEED DEPARTMENT OF ENERGY 2017 REQUIREMENTS.

VRB

Rev. Date	Rev. #	Rev. Title
9-26-19	6	DATA UPDATE
9-26-19	5	ENDVIEW UPDATE

Hillphoenix
A DOVER COMPANY