UPL-NRG

Single-Deck Self-Contained Merchandiser
8' (Boxed Produce)

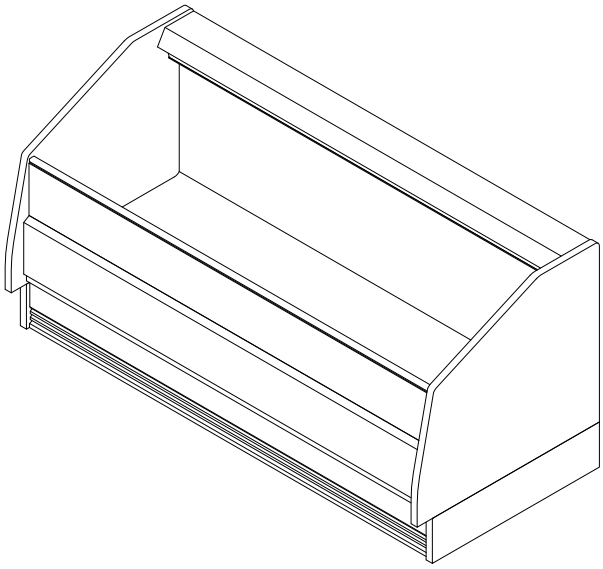

SHIPPING WEIGHT	
Case	Weight
UPL-NRG	---

2017 DOE COMPLIANT

COMPONENT

ALL MEASUREMENTS ARE TAKEN PER ASHRAE-72-2005 SPECIFICATIONS. HILLPHOENIX REFRIGERATED DISPLAY CASES FOR SALE IN THE UNITED STATES MEET OR EXCEED DEPARTMENT OF ENERGY 2017 REQUIREMENTS.

UPL-NRG

Rev Date:	Rev #	Revision Description:
10-16-18	3	DATA UPDATE
5-8-18	2	NEW STANDARDS

Hillphoenix
A DOVER COMPANY

UPL-NRG

Single-Deck Self-Contained Merchandiser
8' (Boxed Produce)

ELECTRICAL DATA			
Case Length	Fans Per Case	High Efficiency Fans	
		120 Volts	
		Amps	Watts
8'	2	0.17	20

GUIDELINES AND CONTROL SETTINGS					
BTUH/ft	Superheat Set Point @ Bulb (°F)	Evaporator (°F)	Discharge Air (°F)	Return Air (°F)	Discharge Air Velocity (FPM)
500	6-8	26	30	40	250

DEFROST CONTROLS		
Defrost Per Day	Timed-Off Defrost	
	Fail-Safe (Min)	Termination Temp
6	45	47

NOTES:

- "- - -" indicates that the feature is not an option on this case model.
- Listed BTUH/ft indicate parallel operation. Conventional ratings may be approximated by multiplying listed rating by 1.13. Add 132 BTUH/ft when aftermarket merchandising accessories are utilized to determine the total BTUH load.
- Listed discharge air velocity represents the average velocity immediately after defrost.
- Temperature and defrost settings listed above are recommended start-up settings. Final operational settings may need to be adjusted for the store conditions in which the case operates.
- The recommended evaporator temperatures may need to be adjusted based on system setup, store conditions, etc. The minimum recommended evaporator temperature is 4°F below the listed evaporator temperature.
- Timed off defrost is recommended for medium temperature applications.

2017 DOE COMPLIANT NSF c UL us COMPONENT

ALL MEASUREMENTS ARE TAKEN PER ASHRAE-72-2005 SPECIFICATIONS. HILLPHOENIX REFRIGERATED DISPLAY CASES FOR SALE IN THE UNITED STATES MEET OR EXCEED DEPARTMENT OF ENERGY 2017 REQUIREMENTS.

Rev Date:	Rev #	Revision Description:
10-16-18	3	DATA UPDATE
5-8-18	2	NEW STANDARDS

Hillphoenix A DOVER COMPANY

UPL-NRG

Single-Deck Self-Contained Merchandiser
8' (Boxed Produce)

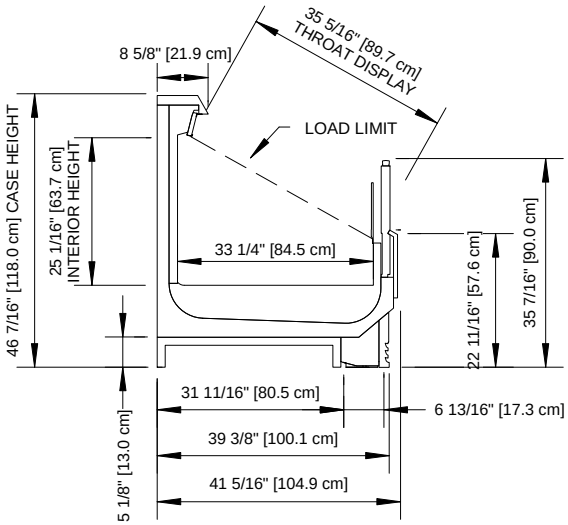

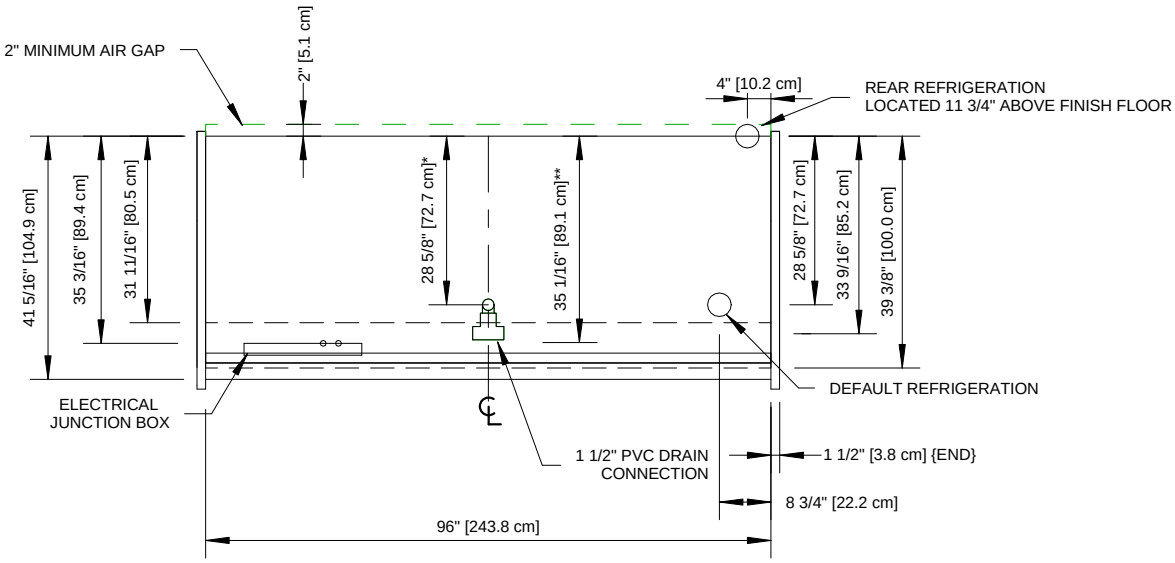

NOTES:

* STUB-UP AREA

** RECOMMENDED STUB-UP CENTERL INE FOR ELECTRICAL AND HUB DRAINS

- Ends add approximately 1" to case height, 1" to the front and 1/2" to the back

2017 DOE COMPLIANT

COMPONENT

ALL MEASUREMENTS ARE TAKEN PER ASHRAE-72-2005 SPECIFICATIONS. HILLPHOENIX REFRIGERATED DISPLAY CASES FOR SALE IN THE UNITED STATES MEET OR EXCEED DEPARTMENT OF ENERGY 2017 REQUIREMENTS.

UPL-NRG

Rev Date:	Rev #	Revision Description:
10-16-18	3	DATA UPDATE
5-8-18	2	NEW STANDARDS

Hillphoenix
A DOVER COMPANY